Bendigo Bank | Powered by tyro

PRO KEY EFTPOS MACHINE USER GUIDE

WELCOME TO YOUR NEW PRO KEY EFTPOS MACHINE BOX

We recommend bookmarking this guide for future reference.
It provides useful tips and steps for commonly used functions and questions.

TABLE OF CONTENTS

1. GETTING STARTED 3
- 1.1 What's in your Pro Key EFTPOS Machine box? 3
- 1.2 What's in your Charging base box*? 4
- 1.3 What's in your Ethernet base box*? 4

2. HANDY INFORMATION 4

3. YOUR NEW PRO KEY EFTPOS MACHINE 5

4. GETTING SET UP 6
- 4.1 Installing and charging the battery 6
- 4.2 Inserting a paper roll 6
- 4.3 Set up your Charging base (if applicable) 7
- 4.4 Set up your Ethernet base (if applicable) 7
- 4.5 Keypad functionality 7
- 4.6 Network 8
  - 4.6.1 Connecting to WiFi: 8
  - 4.6.2 Connecting to Ethernet: 8
- 4.7 Machine activation 8
- 4.8 Software download 8
- 4.9 Payments app 9
  - 4.9.1 Setting your passwords 9
  - 4.9.2 Payments app settings 9
  - 4.9.3 Choosing receipt printing 9
  - 4.9.4 Tipping Preference 10
- 4.10 Standalone or POS Integration Mode 10

5. OTHER PRODUCTS AVAILABLE TO YOU 11
- 5.1 Tyro Portal 11
- 5.2 Tyro App 11
- 5.3 Tyro Service Status 11

6. START TRANSACTING 12
- 6.1 Accepting a payment 12
  - 6.1.1 Accepting a payment in standalone mode 12
  - 6.1.2 Accepting a payment in POS integration mode 12
- 6.2 Processing a refund 12
  - 6.2.1 Processing a refund in standalone mode 12
  - 6.2.2 Processing a refund in POS integration mode 12
- 6.3 Processing a MOTO payment or refund (subject to approval) 13
  - 6.3.1 Processing a MOTO payment in standalone mode 13
  - 6.3.2 Processing a MOTO refund in standalone mode 13
  - 6.3.3 Processing a MOTO payment or refund in POS integrated mode 13
- 6.4 Reprint last receipt 13
- 6.5 Reversals 13

7. SETTLEMENT REPORTS 14
- 7.1 Accessing Settlement reports 14

8. TRANSACTION HISTORY 14

9. PAYMENT SETTINGS 14
- 9.1 Payments app 14
  - 9.1.1 Enabling/Disabling MOTO 14
  - 9.1.2 Enabling/Disabling Tipping 14
  - 9.1.3 Select default Tipping values 15
  - 9.1.4 Enabling standalone or integrated mode 15
  - 9.1.5 Enabling Password-protect menu 15
  - 9.1.6 Enabling operational access permissions 15
- 9.2 Receipt preferences 15
- 9.3 Device settings 16
- 9.4 Display settings 16
- 9.5 Sound Settings 16

10. TROUBLESHOOTING 17
- 10.1 Reboot your Pro Key EFTPOS machine 17
- 10.2 Unable to connect to the internet 17
- 10.3 Incorrect passwords 17

11. CLEANING YOUR PRO KEY EFTPOS MACHINE 17

12. ERROR CODES AND DESCRIPTIONS 18

13. ENSURING YOU'RE PROTECTED 19
- 13.1 Maintaining an inventory 19
- 13.2 To safeguard against tampering 19

14. USING PRO KEY EFTPOS MACHINE IN A TERMINAL SHARING GROUP SET UP 19
- 14.1 Processing transactions in a Multi-merchant set up 19
  - 14.1.1 Processing transactions in standalone mode 19
  - 14.1.2 Processing transactions in POS/ PMS integration mode 19
- 14.2 Payments app settings 20
  - 14.2.1 MOTO (subject to approval) 20
  - 14.2.2 Tipping 20

1. GETTING STARTED

1.1 What's in your Pro Key EFTPOS Machine box?

1. Your new Pro Key EFTPOS Machine
2. Power adapter and cable
3. Long-life rechargeable battery
4. 2 paper rolls
5. Audio jack adaptor
6. POS system and door decals

SAFETY WARNING

The Tyro Pro Series EFTPOS Machine and their ethernet and charging bases contain electronic components and should be kept away from liquids and excessive moisture. Direct contact with liquids can damage the devices, potentially leading to malfunction or failure, or personal harm.

This terminal is designed for indoor use only and to be operated in a dry environment and only with approved power supplies and cables.

To ensure safe use do not expose the terminal to:

- Liquids, splashes, or spills, excessive moisture or condensation
- Ensure that cables and terminal connections are dry before charging and use
- Follow cleaning instructions (in this document)

In environments with higher risk of water or contact with liquids:

- Position the terminal away from wet areas as much as practical
- Use accessory stands where appropriate to elevate the terminal and bases (visit Tyro.com/ for more info)
- Take precautions when cleaning down wet areas to ensure terminals and cables are removed and or protected from water ingress.

If the terminal, cables or power-supply are exposed to liquid:

- Disconnect the terminal from the power supply immediately if safe to do so.
- Stop using the device.
- Contact Tyro support team on 1300 10 TYRO (8976).

1.2 What's in your Charging base box*?

1. Your charging base

1.3 What's in your Ethernet base box*?

1. Your Ethernet base
2. Power adaptor and cable
3. Ethernet cable

*The charging and Ethernet bases are sold separately. If you would like to order one, or if any items are missing, please contact our Aussie-based Customer Support team 7 days a week on **1300 10 TYRO (8976)..**

2. HANDY INFORMATION

If you are new to Bendigo Bank powered by Tyro, you have been emailed with your Merchant ID (MID)*. MID(s) are unique identifiers for your account with Tyro. Existing customers can find their MID via the Tyro Portal. We suggest you note them down somewhere safe for future reference.

- **Note:** You may have been assigned multiple MIDs, depending on the requirements of your business. Examples include if you have more than one trading location or wish to settle different machines to different bank accounts.
- We will ask you for your MID when you call our Customer Support line, and we will sometimes refer to your MID(s) in communications and service updates.

*Please note, when calling Tyro for assistance with your EFTPOS machine, ID checks may be performed dependent on the nature of the enquiry.

It's important you keep your contact details with Tyro updated, so we can make sure you have the information you need to keep your EFTPOS machine running smoothly.

3. YOUR NEW PRO KEY EFTPOS MACHINE

1. Power button
2. Volume keys
3. USB Type-C connector for power charging
4. Paper roll cover
5. Battery cover

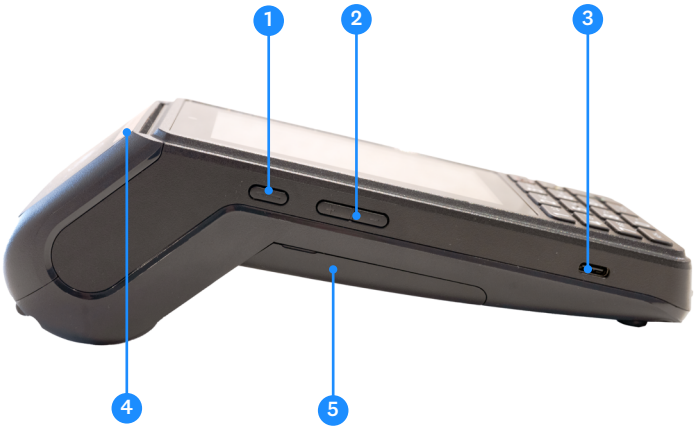

6. Contactless sensor
7. High resolution touch screen
8. Physical keypad
9. Smart card reader
10. Easy loading printer
11. LEDs for contactless transactions
12. Magnetic card reader

13. Speaker
14. SIM 1 card slot
15. SIM 2 card slot
16. Battery compartment

4. GETTING SET UP

4.1 Installing and charging the battery

The battery provided is designed specifically for your Pro Key EFTPOS machine. If the battery is not inserted in the machine already:

1. Before plugging in your machine, turn your machine over and unclip the battery door by pushing the clips as shown in the picture below.
2. Find the battery pack included in the box and place in the back of the machine.
3. Attach the battery door.

We recommend fully charging the battery before first use. The machine charges its battery each time the power adapter is connected.

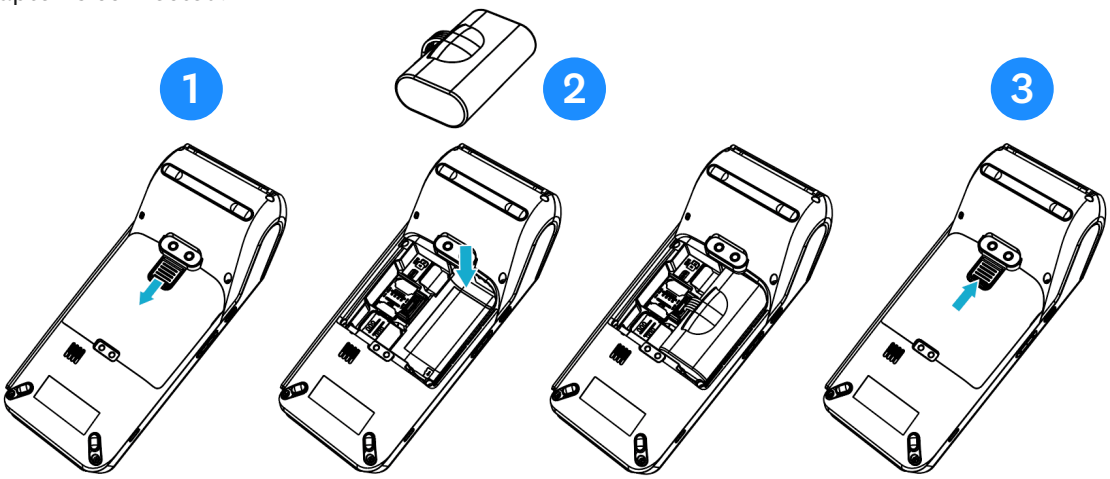

To charge your battery:

1. Connect the power adapter provided to the machine USB type-C connector.
2. Connect the power adapter to the power supply.
3. The battery icon on the top of the screen will show that it is charging.

4.2 Inserting a paper roll

The Tyro Pro uses the same paper roll as the Mobile EFTPOS machines. Paper rolls can be purchased via the Tyro Pro Key App or Tyro Portal.

To insert a paper roll:

1. Open the paper cover by lifting the catch located at the top of your Pro Key EFTPOS machine and pull the cover down towards the back of the machine.
2. Insert the paper roll following the picture below.
3. Pull the paper so that you can see the receipt paper when you clip the cover into position.

Advice: when inserting a new paper roll, tear off the first length to avoid printing on the adhesive area.

Note: Only use paper rolls provided by Tyro – unapproved paper rolls may damage the printer inyour machine.

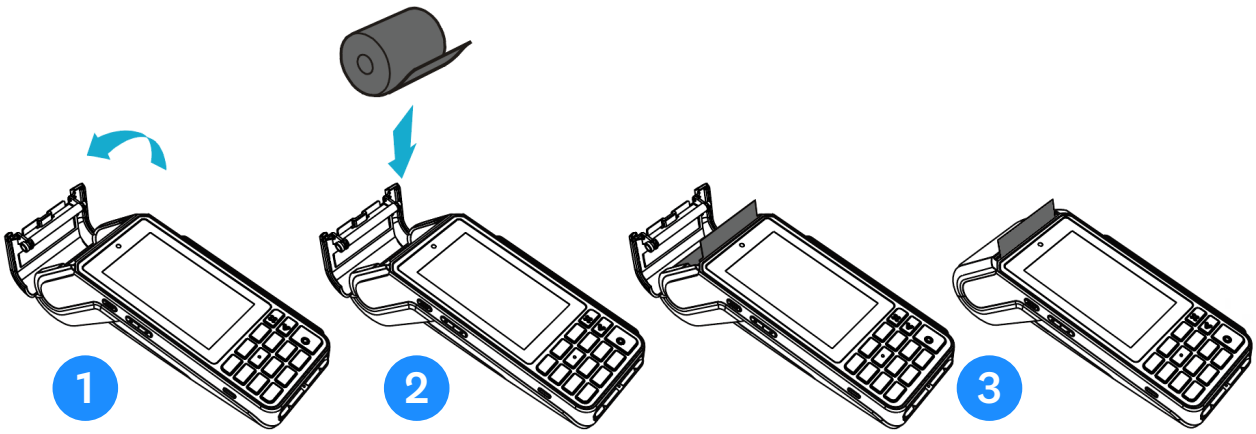

4.3 Set up your Charging base (if applicable)

1. Connect the charging base to the USB-C power cord provided with your Pro Key EFTPOS machine.
2. Place your Pro Key EFTPOS machine on the base to charge. The battery icon on the top of the screen will show that it is charging.

4.4 Set up your Ethernet base (if applicable)

1. Connect the Ethernet base to the power adaptor and cable provided with it.
2. Connect the Ethernet base to the Ethernet cable provided with it.

Note: an Ethernet connection is required.

3. Place your Pro Key EFTPOS machine on the Ethernet base to charge and use your Ethernet connection. The battery icon on the top of the screen will show that it is charging.

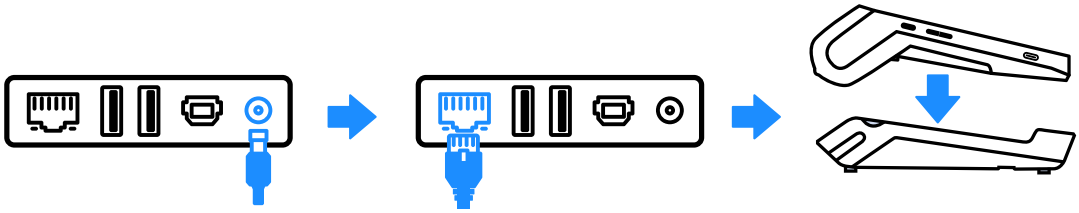

4.5 Keypad functionality

Your Pro Key EFTPOS machine has a physical keypad and a touchscreen, both of which can be used to interact with the on-screen commands.

Keypad	Touchscreen
	Confirm / OK / Proceed
	Back / Backspace
	Cancel / Close / Skip
FUNC	Function
MENU	Menu

4.6 Network

You need an internet connection to process a transaction. Your new Pro Key EFTPOS machine provides mobile and WiFi network connectivity options. If you purchased an Ethernet base you also have the option to use an Ethernet connection. We recommend that you use WiFi or Ethernet; the machine will attempt to automatically switch over to the mobile network if it is unable to connect to WiFi or Ethernet.

Follow the steps below to connect to the internet:

4.6.1 Connecting to WiFi:

1. Turn on the machine by pressing the **Power key** (see diagram on Page 5).
2. Tap **'Get Started'**. Your machine will ask if you have an Ethernet base. Select **'No, I don't have a base'** to continue connecting to WiFi.
3. Your machine will scan for available WiFi networks. Select your chosen WiFi network.
   - **Note:** If you don't immediately see the network you are looking for, the machine will auto scan for new networks after 30 seconds.
   - If you do not see the network you'd like to connect to or would like to connect your machine to a hidden WiFi network, select **'Add network'** and manually input the relevant details. If this option is not available when you are setting up your machine, you will be able to set this up via the machine settings later on.
4. If prompted, enter your WiFi password and tap **'Connect'**.
5. Once connected you will see a success message:
   - Select **'Next'** for the machine to download the required software/applications; or
   - Select **'Change WiFi Network'** if you want to connect to a different WiFi network.

If you see **'No WiFi networks found'**:

1. Select **'Search again'** or **'Skip WiFi'** if you wish to connect to mobile network.
2. Select **'Connect to mobile network'** and once connected you will see a confirmation message.
3. Tap on **'Next'** to proceed to the activation step.

4.6.2 Connecting to Ethernet:

1. Turn on the machine by pressing the **Power key** (see diagram on Page 5).
2. Tap **'Get Started'**. Your machine will ask if you have an Ethernet base. Select **'Connect ethernet base'**.
3. Follow Ethernet base set up instructions in section 4.4 and press continue on the Pro Key EFTPOS machine.
4. Your machine will scan for available Ethernet networks. Select the correct network.
   - **Note:** If you don't immediately see the network you are looking for, the device will auto scan for new networks after 30 seconds.
   - Your Ethernet network name can be found on a sticker on the back of the Ethernet base labelled 'SSID'. Select **'Next'** to proceed to the activation step; or
5. Your machine will now connect to the Ethernet network.

4.7 Machine activation

Follow the on-screen prompts to activate your Pro Key EFTPOS machine. In the instance you have swapped out your existing Bendigo Powered by Tyro EFTPOS machine, you can activate your new machine by scanning the barcode of the old EFTPOS machine it is replacing, using the in-built camera. If you need help activating your machine, please contact our Australian-based support team on 1300 10 TYRO (8976).

4.8 Software download

Once your machine is connected to the network, the device will update and launch the required software.

Please note: this process may take a few minutes, depending on your network strength and coverage.

4.9 Payments app

Once your machine is activated, you will be prompted to set up your Payments app preferences.

4.9.1 Setting your passwords

1. When prompted to set your Admin password, enter and confirm, and hit **'Next'**. The Admin password gives you access to manage your device settings and change your Payments app preferences.

Note: All passwords protect the security of your Pro Key EFTPOS machine, so you don't want them to be too easy to guess. When choosing your password, please note:

- Must be 6 digits.
- All digits cannot be the same e.g. 111111.
- Digits cannot be sequential e.g. 123456.

2. Next you will be prompted to set your Operator password, which is required to perform refund transactions. This password cannot be the same as the Admin password. When choosing your Operator password, note the guidance provided above.
3. Enter, confirm your password, and hit **'Next'**.

You can change passwords via the Settings menu in the Payments app.

4.9.2 Payments app settings

Depending on the features you have requested, you may be prompted to 'Enable' or 'Disable' features for your Pro Key EFTPOS machine.

Note: these features are specific to the EFTPOS machine you're setting up and your preferences will not apply to other machine(s) you may have. These settings can be changed later in the Payments app settings screen.

MOTO (Mail Order, Telephone Order)*

Subject to approval by Tyro, MOTO allows you to process transactions over the phone. You will be required to enter in the Credit Card Number, Expiry Date, and CVV (Telephone orders only).

Note: MOTO can only be used for credit cards – eftpos cards will be rejected.

*MOTO transaction options are subject to approval. The risk of MOTO transactions resides with the merchant, not the bank/acquirer or the cardholder. For further information about MOTO transactions refer to **www.tyro.com/terms-and-condition** and Tyro's Chargebacks and Disputes Guide at **www.tyro.com/blog/chargebacks-disputes-guide**

4.9.3 Choosing receipt printing

After setting your passwords and features, you will be taken to the 'Preferences' page. To set your receipt preferences, select from the options provided for merchant and customer receipts:

1. **Merchant receipts**
   - Print automatically (always print a merchant receipt).
   - Ask to print (the machine will ask if you want a merchant receipt after every transaction).
   - No Merchant receipts (never print a merchant receipt).
2. **Customer receipts**
   - Print receipts (toggle on or off to enable or disable printed customer receipts).
   - Digital receipts (toggle on or off to enable or disable email receipts).

Once you have set your preferences, select **'Confirm'** to save your selection.

4.9.4 Tipping Preference

If you have Tipping enabled on your machine, you can set the Tipping Preferences that work for your business.

1. Select **'Tipping'.**
2. Select between **Percentage (%)** or **Dollar value ($)** for your default tipping method. (**Note:** You can also configure the default tip values should you wish to change the preset values. You can press the Func key to add a decimal point to the default tipping values).
3. Select **'Save'** to save the changes.
4. Select **'Next'** at the bottom of the screen. You will see **'Getting Payments app ready'** and shortly after **'Set up complete'**.

You are now ready to take payments in standalone mode.

4.10 Standalone or POS Integration Mode

Your machine will now ask if you if you want to use it in standalone mode or pair with a POS.

If you want to process transactions directly on the machine select **'Set up in Standalone mode'** and you will be able to start using the machine.

If you are using a Point of Sale (POS) system, select **'Pair with POS'** and follow the prompts on the machine. If you would like to pair your terminal with multiple POS systems, you can add these by selecting **'Pair with POS'** for each new machine.

For more detailed pairing instructions visit **www.help.tyro.com** and search for your POS system.

5. OTHER PRODUCTS AVAILABLE TO YOU

5.1 Tyro Portal

The Tyro Portal is a great tool for helping you with your daily and monthly reporting. It not only provides an instant snapshot of your day's takings, but it can also generate monthly reconciliation and cost analysis reports, giving you valuable overviews of your business activity. Here, you can also access your daily machine reports, monthly invoices and forms for additional services.
Visit www.merchant.tyro.com to get started.

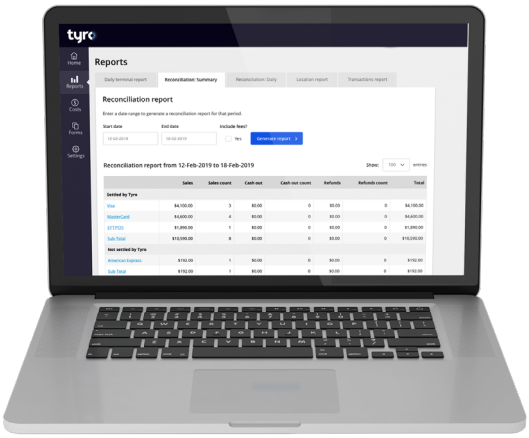

5.2 Tyro App

You can't be in-store all the time. But with the Tyro App you can stay on top of business with real time EFTPOS data, letting you access hourly transaction reports for each of your locations, check Tyro Service Status, and access Tyro Help. If you haven't already, download the Tyro App on Google Play™ or the App Store.

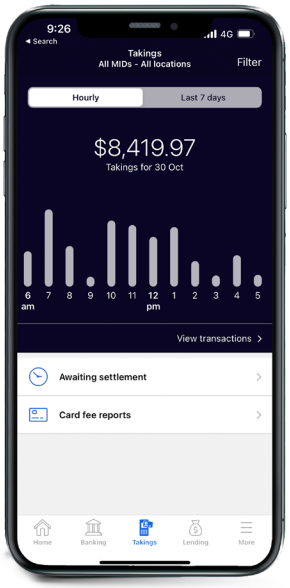

5.3 Tyro Service Status

Every now and then, things don't go to plan.
At www.status.tyro.com, you can see our systems' real time status including transaction processing, EFTPOS machine connectivity, and the Tyro Portal.

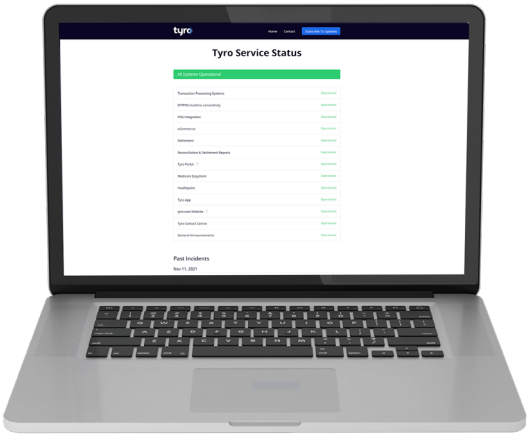

6. START TRANSACTING

6.1 Accepting a payment

6.1.1 Accepting a payment in standalone mode

With your Pro Key EFTPOS machine, the following payment types can be taken:

- Contactless payments (Tap & Go) and card insert.
- Visa, Mastercard®, American Express*, JCB, UPI and eftpos.
- Google Pay, Apple Pay, and Samsung Pay.

*If you already have a merchant agreement with American Express please call our Aussie-based Support team 7 days a week on **1300 10 TYRO (8976)** to organise enablement on your machine. If you don't have a Merchant Agreement with American Express, Tyro can fulfil that for you on behalf of American Express as long as you're eligible for the American Express Direct Settlement program with Tyro. For more information go to www.help.tyro.com

To take a payment in standalone mode, you will see the **'Enter purchase amount'** screen by default on your machine:

1. Enter the transaction amount.
2. Select **'Proceed'** on the touch screen or press ◯ on the key pad.
3. The cardholder may be prompted to enter their PIN after using their preferred method to pay.
4. If successful an **'Approved'** message will appear.
5. The machine will ask if a receipt is needed, depending on your preferences.

6.1.2 Accepting a payment in POS integration mode

To take a payment in POS integration mode, initiate the payment on your POS system.

> **Important:** As the business operator, you should provide adequate privacy for the cardholder to enter their PIN. In addition, you should remind the cardholder to cover the screen when entering their PIN to protect their confidentiality.

6.2 Processing a refund

6.2.1 Processing a refund in standalone mode

If you need to refund the whole transaction amount or difference to a customer's card in standalone mode, on the Purchase screen:

1. Select the ▦ icon on the top left of the screen.
2. Select **'Refund'** on the touch screen or press ◯ on the key pad when the option is highlighted.
3. Enter the refund amount and press **'Refund'**.
4. Enter the Operator password.
   - **Note:** Alternatively, you can select the ⋮ icon at the top right of the screen to use the Admin password.
5. Ask the cardholder to tap/insert the card, select the account, and enter their PIN.
6. If successful, you will see an **'Approved'** message on your Pro Key EFTPOS machine, and depending on your chosen receipt settings, will print a receipt, or ask you if you want to print a receipt.

6.2.2 Processing a refund in POS integration mode

To perform a refund in POS integration mode, initiate the full or partial refund on your POS system.

Please note: you must maintain a refunds, disputes and returns policy which complies with Australian consumer laws and addresses undelivered goods, damaged or faulty goods and goods which are not as described.
For returned goods, consumers must be provided with an outcome for their claims within 180 days of delivery of the transaction.

6.3 Processing a MOTO payment or refund (subject to approval)

6.3.1 Processing a MOTO payment in standalone mode

If you need to take payments for mail orders or telephone orders (otherwise known as MOTO, where the customer is not present), on the purchase screen:

1. Select the icon on the top left of the screen.
2. Select **'MOTO Purchase'** on the touchscreen or press on the keypad when the option is highlighted.
3. Enter the purchase amount and select **'MOTO Payment'**on the touchscreen or press on the keypad.
4. For purchases over $200, enter the Operator password.
   Note: Alternatively, you can select the icon at the top right of the screen to use the Admin password
5. Choose the payment option – **'Telephone order'** or **'Mail order'**.
6. Enter the card number, expiry date, and CVV (telephone orders only).
7. Press on the keypad to complete the refund.
8. If successful, you will see an **'Approved'** message and your Pro Key EFTPOS machine, depending on your chosen receipt settings, will print a receipt, or ask you if you want to print a receipt.

6.3.2 Processing a MOTO refund in standalone mode

If you need to refund the whole transaction amount or difference to a customer's card, on the Purchase screen:

1. Select the icon on the top left of the screen.
2. Select **'MOTO Refund'** on the touchscreen or press on the keypad when the option is highlighted..
3. Enter the refund amount and press **'MOTO Refund'** on the touchscreen or press on the keypad.
   Important: surcharge must be included in refund amount.
4. Enter the Operator password.
   Note: Alternatively, you can select the icon at the top right of the screen to use the Admin password.
5. Choose the payment option – **'Telephone order'** or **'Mail order'**.
6. Enter the card number, expiry date, and CVV (telephone orders only).
7. Press on the keypad to complete the refund.
8. If successful, you will see an **'Approved'** message and your Pro Key EFTPOS machine, depending on your chosen receipt settings, will print a receipt, or ask you if you want to print a receipt.

6.3.3 Processing a MOTO payment or refund in POS integrated mode

If you need to take payments for mail orders or telephone orders (otherwise known as MOTO, where the customer is not present), in POS integrated mode:

1. Initiate a purchase or refund on your POS system.
2. Click the on the present card screen of your Pro Key EFTPOS machine.
3. Choose the payment option using either the touchscreen or the keypad - **'Telephone order'** or **'Mail order'**.
4. Enter the card number, expiry date and CVV (telephone orders only).
5. Complete the purchase and if successful you will see an **'Approved'** message on the Pro Key EFTPOS machine.

Note: for MOTO purchases over $200 and any MOTO refunds, your machine will prompt for an operator password. If you would prefer to use your Admin password, select the icon at the top right of the screen.

6.4 Reprint last receipt

If you print receipts using the inbuilt thermal printer on your Pro Key EFTPOS machine, select the icon menu on the top left of the screen and select **'Reprint receipt'**.

6.5 Reversals

In the event a transaction can't be completed due to a system error, it will be reversed automatically.

Clearing a reversal may take a few moments, especially if there are network connectivity problems. When this happens, you will see a message **'Check your network settings or restart your device'**.

7. SETTLEMENT REPORTS

New Pro Key EFTPOS machine(s) will automatically settle at midnight or 5am. If you are swapping your existing machine for a Tyro Pro Key and have previously called Customer Support to change your settlement cut off time, this should carry over to your new machine. The cut off time can be changed by calling Customer Support.

7.1 Accessing Settlement reports

To see settlements for the pending day, or the previous day:

1. Select the icon on the Purchase screen (top left-hand corner).
2. Select the menu icon (top right-hand corner).
3. Select **'Reports'** and then **'Settlement reports'**.
4. By default, you will see a summary of transactions pending settlement. You can alternatively choose to see a summary of all the transactions that were previously settled.
5. You can also find an option on the top right of the screen to print the settlement report.

8. TRANSACTION HISTORY

To see the approved transactions for the last 7 days:

1. Select the icon on the Purchase screen (top left-hand corner).
2. Select the menu icon (top left-hand corner).
3. Select **'Transaction History'**.
4. You can view Approved transactions from the last 7 days.
5. To reprint a previous receipt, select the relevant transaction and select Reprint Receipt.

9. PAYMENT SETTINGS

9.1 Payments app

Manage your Payments app preferences to best suit your needs including; Feature settings, **'Print business receipts'**, **'Print customer receipts'**, **'Change Admin password'**, and **'Change Operator password'**.

1. Select the icon on the **'Enter purchase amount'** screen.
2. Select the menu icon.
3. Select **'Settings'**.
4. Enter your Admin password and select **'Confirm'**.
5. A list of Payments app preferences will be visible, select the preference you want to change and follow the corresponding prompts.

9.1.1 Enabling/Disabling MOTO (subject to approval)

Enable or disable your MOTO preferences to best suit your needs by:

1. Under **'Payment settings'** section, select **'MOTO'** option.
2. Select On to enable or Off to disable.
3. Select **'Accept'** MOTO terms.

9.1.2 Enabling/Disabling Tipping

Enable or disable your tipping preferences to best suit your needs by:

1. Select **'Tipping'** option under the **'Tipping'** section.
2. Select **'Enable on this machine'** to enable Tipping or **'Disable on this machine'** to disable Tipping.

9.1.3 Select default Tipping values

Change your tipping preferences to best suit your needs by:

1. Select **'Default Tipping Values'** under the Tipping section.
2. Select between **Percentage (%)** or **Dollar value ($)** for your default tipping method.
3. Enter the tipping values.
4. Select **'Save'** to save the changes.

9.1.4 Enabling standalone or integrated mode

To switch between standalone (purchase amount is entered on the Pro Key EFTPOS machine) and integrated mode (purchase amount is sent from the POS system), on the Purchase screen:

1. Select the on the top left of the screen.
2. Select the on the top left of the screen.
3. Select **'Operating mode'.**
4. Enter your operator or admin password.
5. Choose **'Select operating mode'**.
6. Select **'Integrated'** or **'Standalone'**

9.1.5 Enabling Password-protect menu

Enable or disable your password-protect menu preferences to best suit your needs:

1. Select **'Permissions'** under the Security and Permissions section in Payments settings
2. Under **'Password protected menu'**, select On to enable or Off to disable.

Note: This functionality ensures that your machine prompts for an Operator (or Admin) password every time the menu is selected.

9.1.6 Enabling operational access permissions

1. Select **'Permissions'** under the Security and Permissions section in Payments settings
2. Under **'Operational access'**, select the desired permission level for each listed feature.

Permission levels

Anybody: No password required. (Option unavailable for features that require a password by default

Operator or Admin: Requires either an Operator or Admin password, with the flexibility to switch between them.

Admin: Accepts only an Admin password.

9.2 Receipt preferences

To change your receipt preferences:

1. Select the on the top left of the screen.
2. Select the on the top left of the screen.
3. Select **'Payment settings'.**
4. To set merchant receipts select **'Print business receipts'** and select from
   a. **'Always ask'** (the machine will ask if you want a merchant receipt after every transaction).
   b. **'Always'** (always print the receipt).
   c. **'Never'** (never print a receipt).
5. To set customer receipt preferences, select **'Customer receipts'** and choose from:
   a. Print.
   b. Email.

Note: If you choose to enable either or both option(s) the machine will always ask if you want to send a receipt by the method(s) enabled.

9.3 Device settings

These settings are not specific to the Payments setting app and are not password protected.
These include:

- Network and connectivity.
- Turn WiFi on/off.
- Add a new Ethernet base.
- Manually connect to a hidden WiFi network.

Note: your Pro Key EFTPOS machine won't be able to detect an Ethernet base if WiFi is turned off.

- Run Diagnostics - this may be required if you experience an issue with your machine.

9.4 Display settings

You can set your device display brightness level and screen timeout by:

1. Select the icon on the **'Enter purchase amount'** screen.
2. Select the menu icon.
3. Click **'Exit Payments'**.
4. Open the **'Settings app'**.
5. Under **'Display settings'**, select **'Display'**.
6. Slide the display brightness slider to a desired level.
7. Select **'Screen Timeout'** and choose between various time intervals or **'Never'** and then select **'OK'**.

9.5 Sound Settings

1. Select the icon **'Enter purchase amount'**.
2. Select the menu icon.
3. Select **'Exit Payments'.**
4. **'Sound Settings app'**.
5. Under **'Sound Sttings'** select **'Sound'**.
6. Enable or disable Keypad reaction sounds using the toggle.

10. TROUBLESHOOTING

10.1 Reboot your Pro Key EFTPOS machine

The first step to resolving a problem with Pro Key EFTPOS machine is to reboot:

1. Hold down the power button for a few seconds.
2. Select **'Restart'**.
3. Allow a minute for the machine to reboot.
4. Once rebooted, the Payments app opens as normal.

10.2 Unable to connect to the internet

Switching between WiFi and 4G

Offline transactions are not available. If your WiFi is unavailable, you can switch to a mobile network which is supported via the SIM* in your EFTPOS machine. When your WiFi is restored, we recommend that you switch back to WiFi as the primary connection method.

To switch between WiFi and the mobile network follow the steps below:

1. Select the icon.
2. Select the menu icon.
3. Select **'Exit Payments'** at the bottom of the screen.
4. Open Device **'Settings'**.
5. Select **'Network and Internet'**.
6. Disable WiFi by toggling to **'Off'**.

*Removing or replacing the SIM will disable mobile connectivity.

10.3 Incorrect passwords

You are allowed three attempts to guess your Admin and/or Operator password correctly. After three incorrect attempts, you will be unable to access any functionality that requires a password for a 'lockout' time. After this lockout time is complete, you will be allowed to attempt password entry again.

Note: If you cannot remember your password, click on **'Forgot Password'**. Check your account notifications email inbox for a password message.

11. CLEANING YOUR PRO KEY EFTPOS MACHINE

It's important to regularly clean your machine to avoid germs and maintain its hygiene. To do this:

- Unplug all wires from your machine
- Use a soft cloth that is very slightly soaked with soapy water to clean the outside of the machine.
- Do not clean the electrical connections
- Do not use solvents, detergents, or abrasive products. These materials might damage the plastic or electrical contacts
- Avoid exposing your machine to direct sunlight
- Do not put anything into the card reader slot

12. ERROR CODES AND DESCRIPTIONS

For the following decline codes call Tyro Customer Support on 1300 10 TYRO (8976).

13 Invalid amount or refund without matching purchase.
69 MOTO not allowed.
83 Contactless not allowed.
87 Cash out not allowed.

For the following decline codes, call the card issuer immediately - the contact number is on the back of the card.

01 Refer to card issuer
02 Refer to card issuer
03 Invalid Merchant ID
04 Call issuer
05 Refer to card issuer
06 Error. Refer to card issuer
07 Card reported lost or stolen
12 Invalid transaction format
14 Invalid card number
15 Invalid card issuer
19 Error - Retry
21 No matching authorisation for reversal
22 Issuer can't be contacted
25 Unable to locate record on file
30 Unable to format incoming terminal request for scheme
31 Card not accepted
33 Expired card
34 Call issuer. Suspected fraud
36 Call issuer
37 Transaction declined
38 PIN retries exceeded
39 Not credit account
40 Function not supported
41 Call issuer. Card reported lost
42 Incorrect account type
51 Insufficient funds
52 No cheque account
53 No savings account
54 Expired card
55 Incorrect PIN
56 Non existent card number
57 Function not permitted to cardholder
58 Function not permitted to terminal
59 Card appears to be fraudulent
60 Exceed refund limit
61 Exceed withdrawal limit
62 Card has some restrictions
63 Call issuer
64 Original transaction amount error
65 Exceeded withdrawal frequency
66 Transaction declined
67 Call issuer. Suspected fraud.
75 PIN retries exceeded
76 Invalid account
77 Invalid account
78 Invalid account
82 CVV invalid
86 Can not verify PIN
90 Cutoff in progress
91 Card issuer unavailable
92 Unable to route transaction to issuer
93 Call issuer
94 Duplicate transmission
96 System error
98 Security error
N7 CVV invalid
RI Restricted item
TE Switch error
Y1, Y2, Y3 Chip approved transaction
Z1, Z2, Z3 Chip declined transaction

13. ENSURING YOU'RE PROTECTED

As a requirement of the PCI Security Standards Council – all companies and personnel connected in any way with cardholder data must be trained to protect devices which capture payment card data through physical interaction with a payment card. We advise that you review the following with your staff on a regular basis:

13.1 Maintaining an inventory

When you receive a new EFTPOS machine, make a list of the model and serial numbers of your device(s) and keep it in a safe place. On a weekly basis, check your device(s) against this list for any evidence of substitution.

13.2 To safeguard against tampering

When unattended, specifically out of business hours, ensure the EFTPOS machine is stored safely to avoid theft and manipulation and check the EFTPOS machine each day for any signs of tampering.

During regular business hours, inspect your machine from time-to-time, looking for unauthorised changes to the area, including new or frayed stickers, broken seals, a change in look or colour of your EFTPOS machine, damage to the machine - especially around the seams, damage to any cables or other materials that could mask damage, or additional cables that should not be there.

If you suspect tampering of your device, or if your device has gone missing, please contact our Aussie-based Customer Support team available 24/7, 365 days a year on 1300 10 TYRO (8976).

14. USING PRO KEY EFTPOS MACHINE IN A TERMINAL SHARING GROUP SET UP

If your business/ practice operates in a terminal sharing group set up, this enables multiple providers to be linked to a singular terminal with settlement funds being paid to independent bank accounts.

Outlined below are slight variations in machine features if this set up is applicable to you.

14.1 Processing transactions in a Multi-merchant set up

14.1.1 Processing transactions in standalone mode

To process transactions in standalone mode, you will see the screen with a list of providers/ businesses by default on your machine:

1. Select the provider/ business that this transaction is associated with.
2. Select the transaction type from the displayed options.
   Note: only transaction types that are relevant to this practice/ business will be surfaced for selection.
3. Proceed as outlined in **6. Start Transacting** of this User Guide.

14.1.2 Processing transactions in POS/ PMS integration mode

To take a payment in POS/ PMS integration mode, initiate the payment under the correct provider/ business on your POS system.

14.2 Payments app settings

Payments app preferences are set at the machine level in this structure, and will available to the applicable providers/ businesses. To see further information on how to enable/ disable these features, please visit **9. Payment Settings** of this User Guide.

14.2.1 MOTO (subject to approval)

If MOTO is enabled in Payments app settings on your machine, then this transaction option will be available to any provider/ business that has MOTO transaction approval.

The applicable providers/ businesses will be listed on the screen.

If MOTO is disabled in Payments app settings on your machine, this transaction option will not be available to any provider/ business using this terminal, even if that business is approved for MOTO transactions.

14.2.2 Tipping

If Tipping is enabled in Payments app settings on your machine, then this will apply to all providers/ businesses when taking payments. Default Tipping values that are set will also apply to all.

If Tipping is disabled in Payments app on your machine, no provider/ business will be able to accept tips when taking payments.

Bendigo Bank EFTPOS and eCommerce powered by Tyro is issued by Tyro Payments Limited ACN 103 575 042 AFSL 471951 (Tyro). You can contact Tyro on 1300 10 TYRO (8976) or at www.tyro.com/support and access Tyro's dispute resolution process at www.tyro.com/complaint-resolution-process.

Mastercard is a registered trademark, and the circles design is a trademark of Mastercard International Incorporated. Apple, Apple Pay and the Apple logo are trademarks of Apple Inc., registered in the U.S. and other countries.
App Store is a service mark of Apple Inc., registered in the U.S. and other countries.

Google Pay and Google Play logo are trademarks of Google LLC.

If you have any questions regarding the label, or the power supply unit itself, please contact our Aussie-based Support team available 7 days on 1300 10 TYRO (8976).

2024 © Tyro Payments Limited. All rights reserved.

MKT-11385-29092026